Design and Quality
IKEA of Sweden

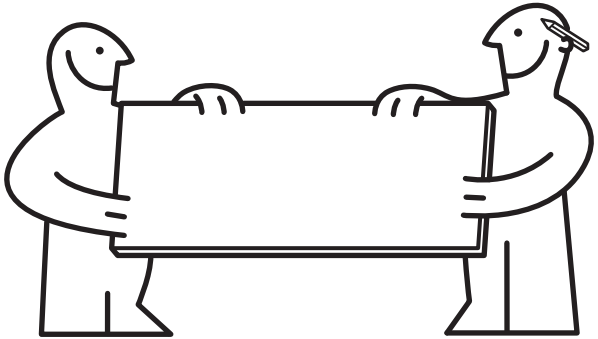

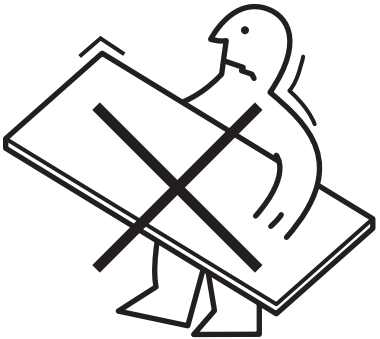

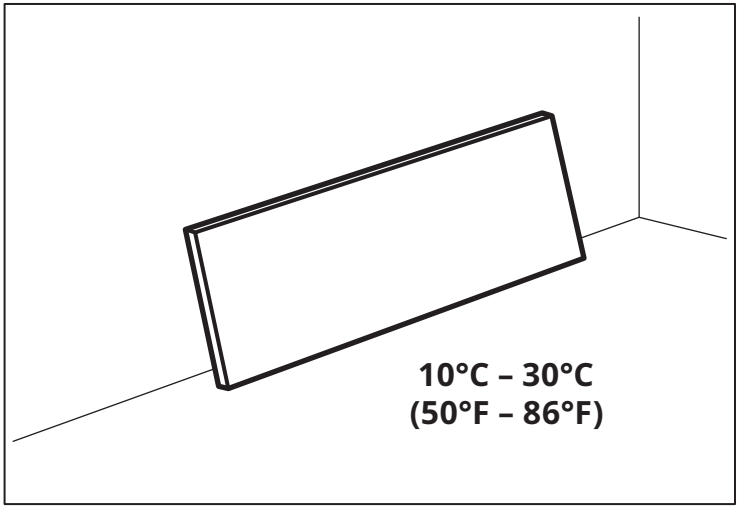

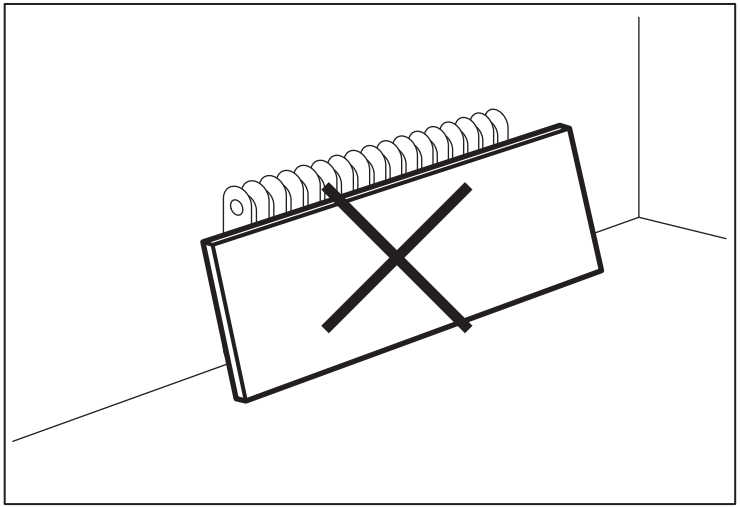

© Inter IKEA Systems B.V. 2009

AA-2310207-1