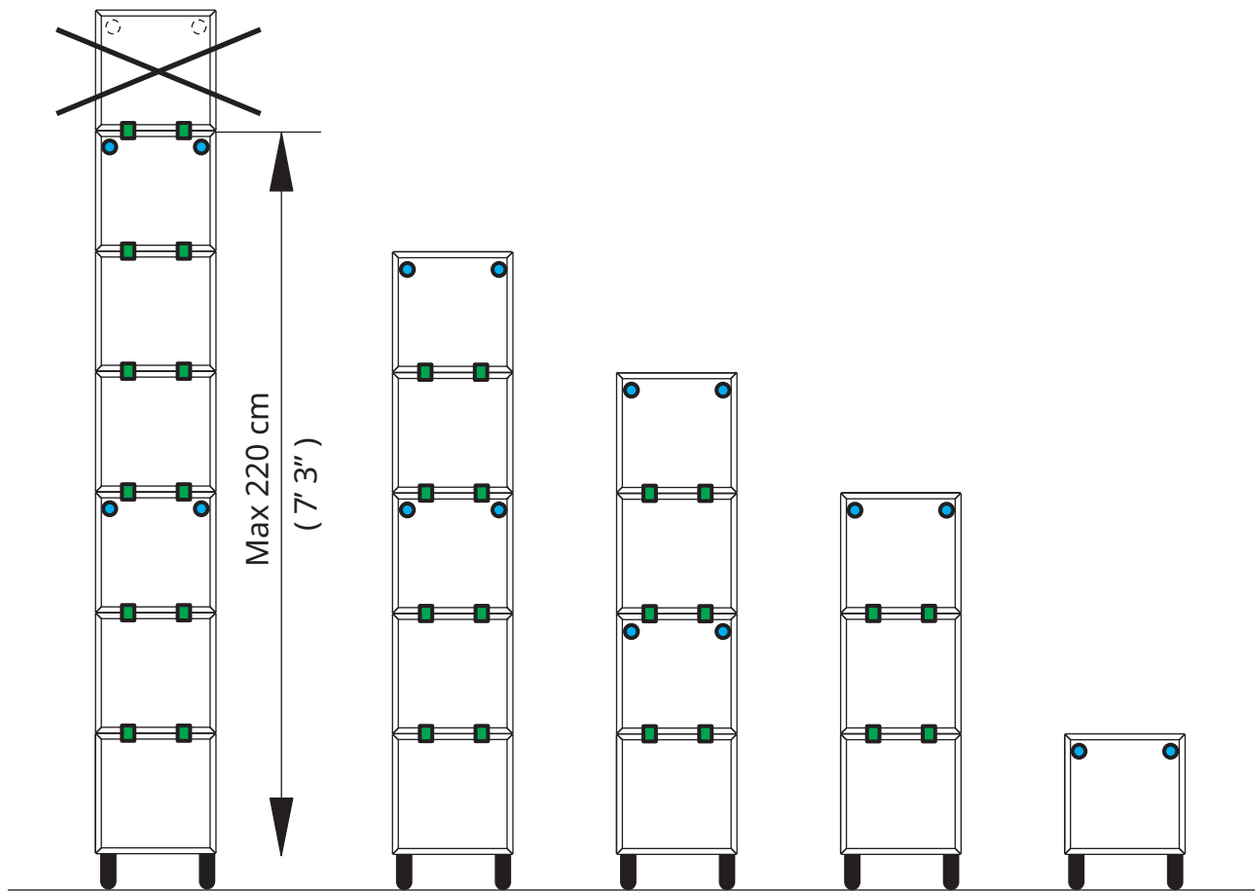

AA-2314413-1
© Inter IKEA Systems B.V. 2016
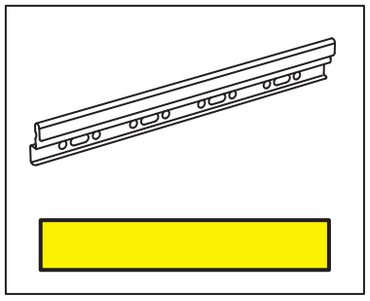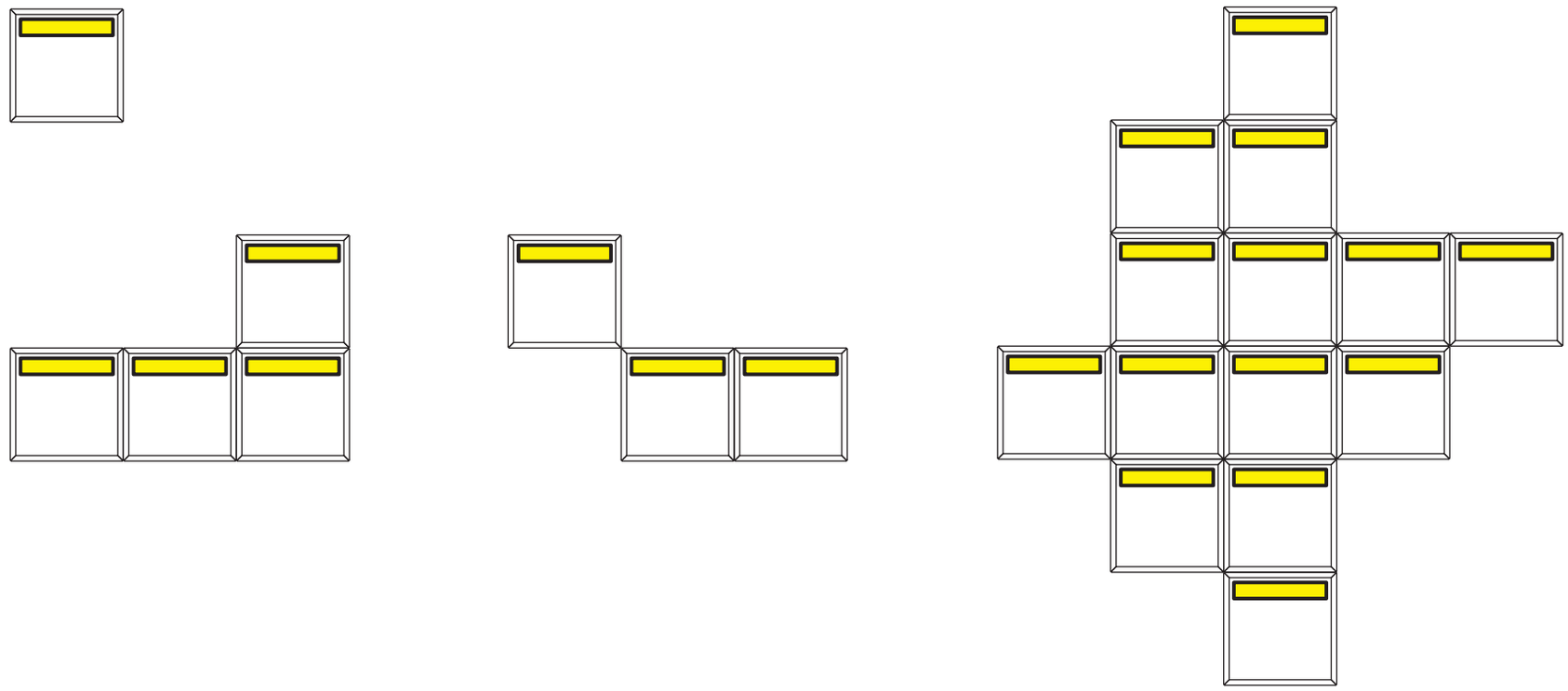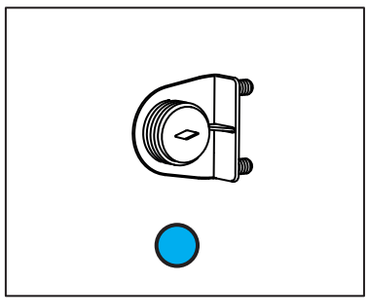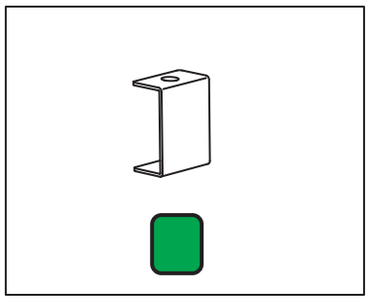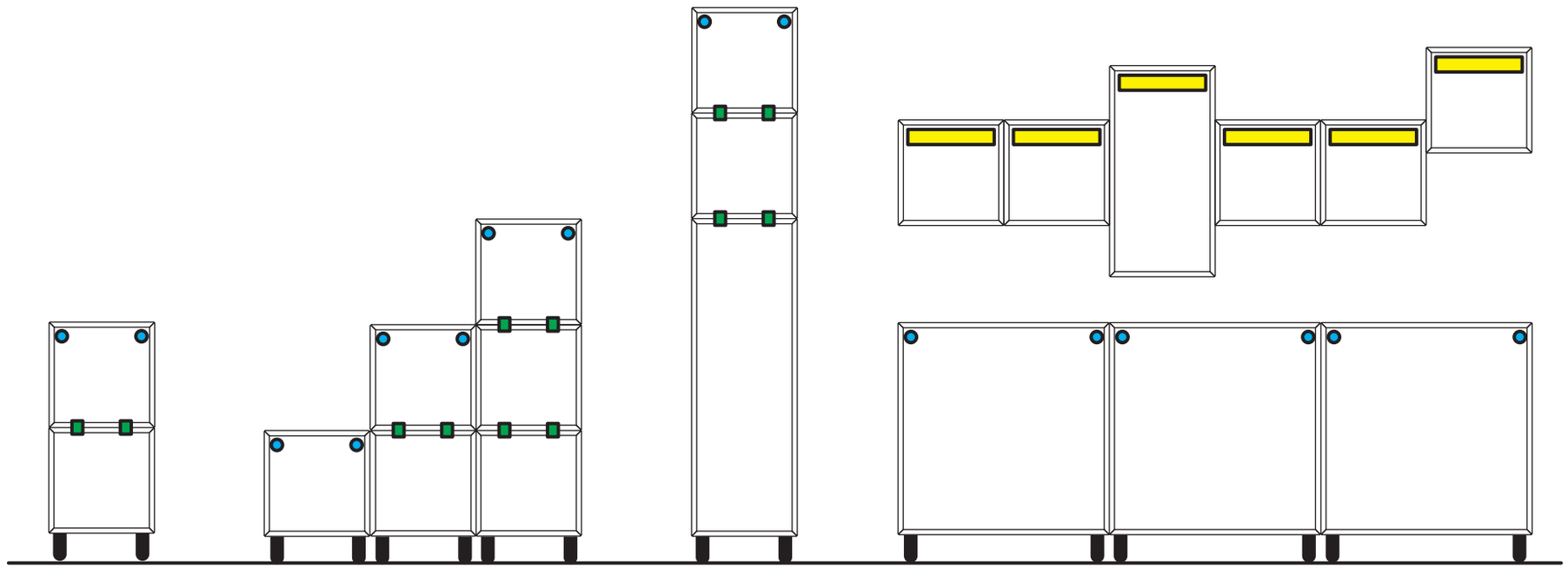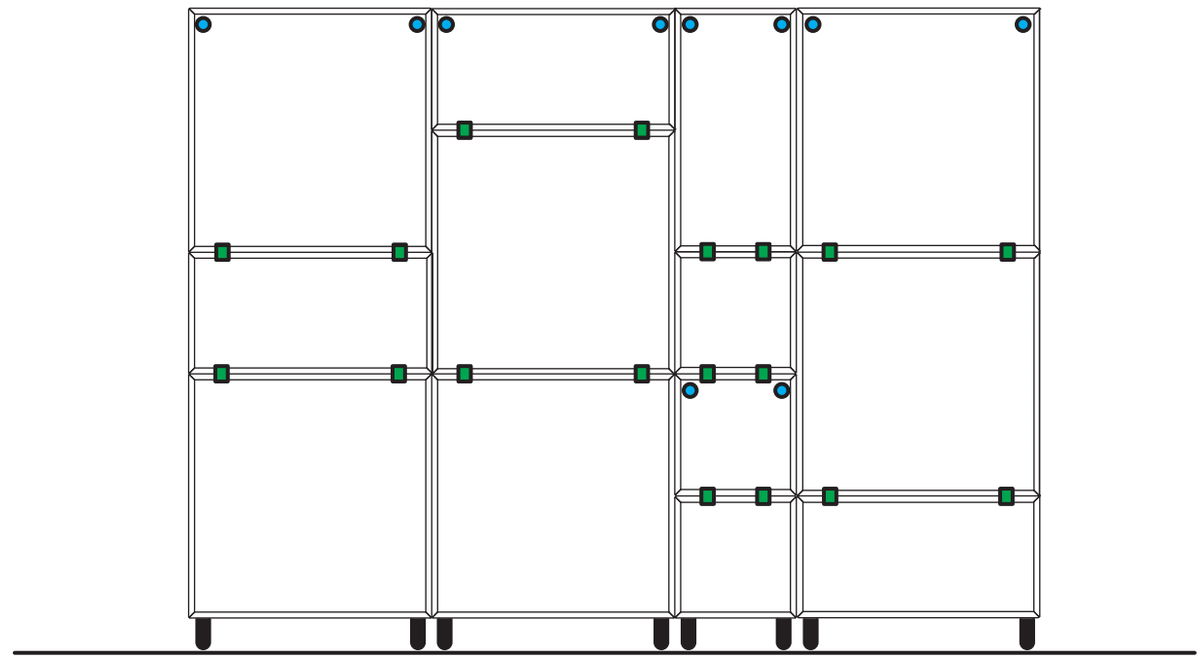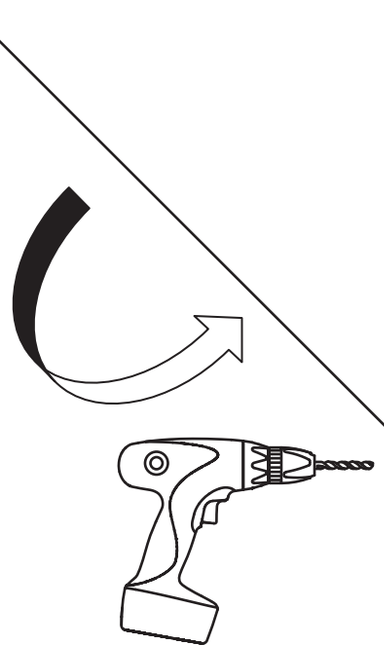
Design and Quality
IKEA of Sweden