ASSEMBLY INSTRUCTIONS

A		1	C		16	E		1
B	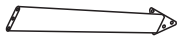	4	D		16	F		4

①

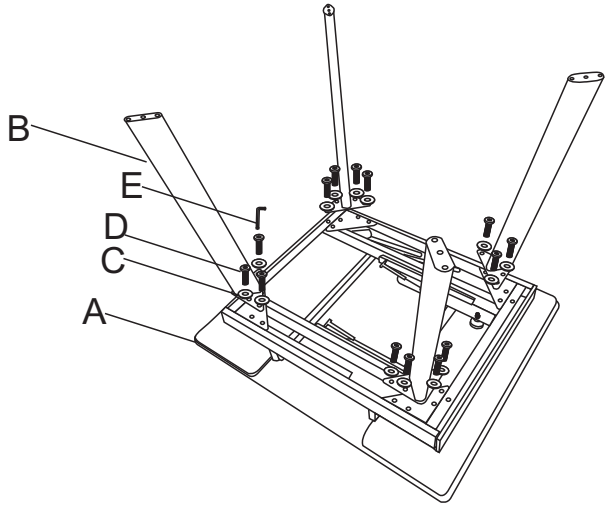

②

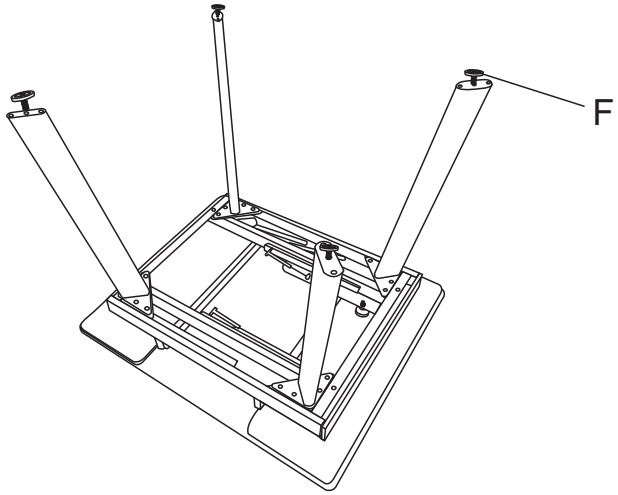

③

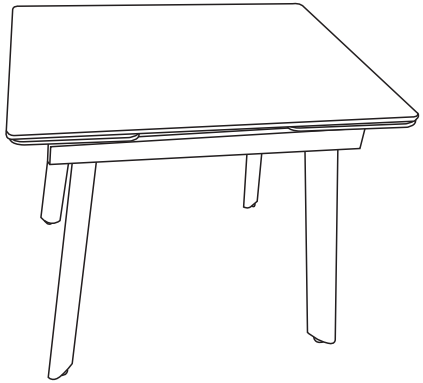

④

