ASSEMBLY INSTRUCTION

1-1pc	2-1pc	3-1pc	4-1pc	5-4pcs
				
A-16pcs	**B-16pcs**	**C-1pc**		
				

①

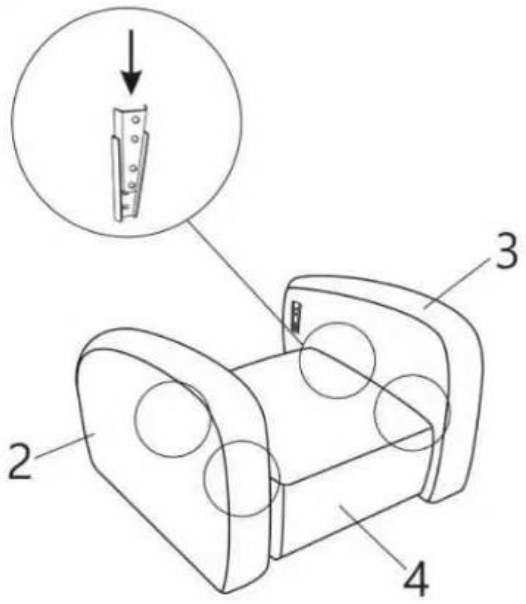

②

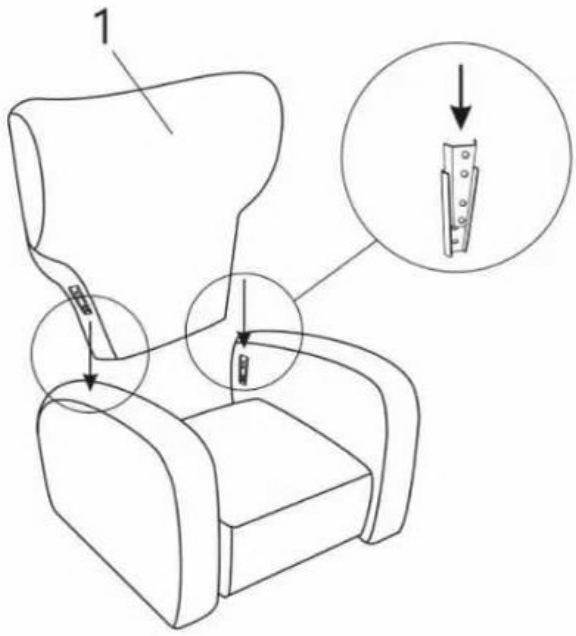

③

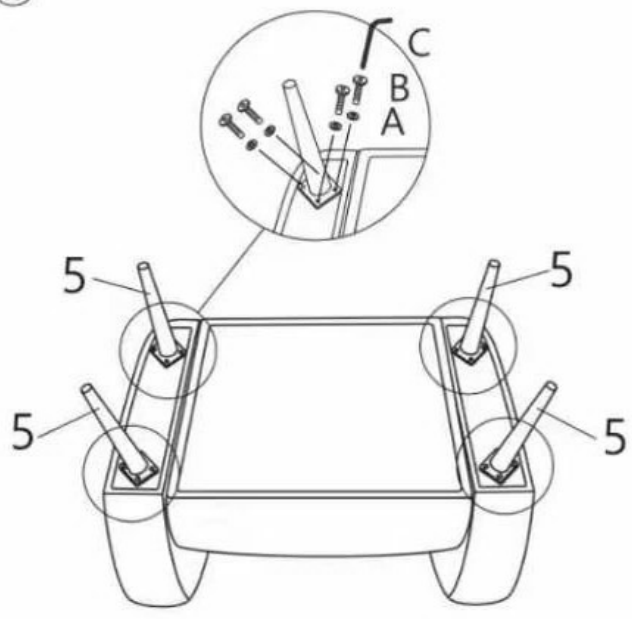

④

