ASSEMBLY INSTRUCTION

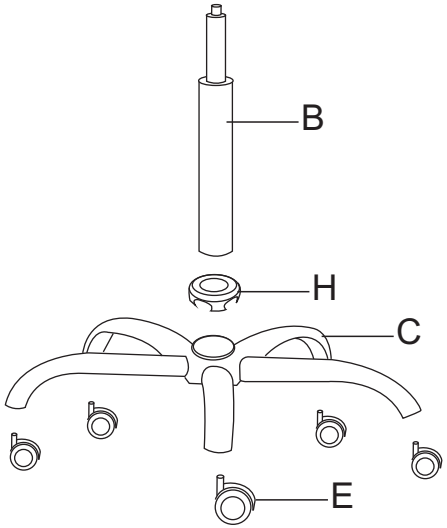

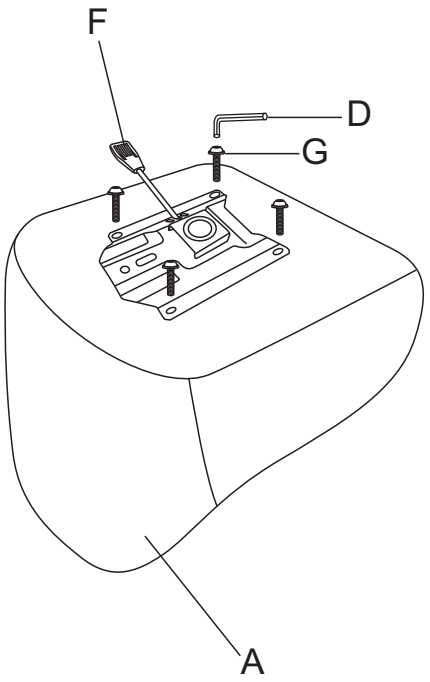

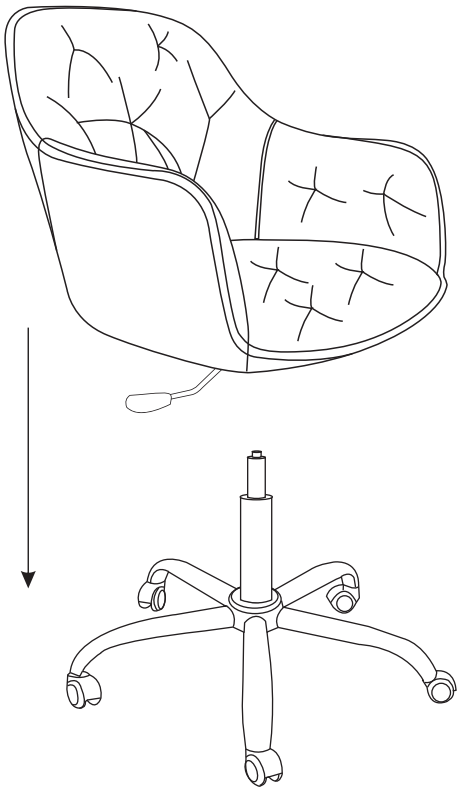

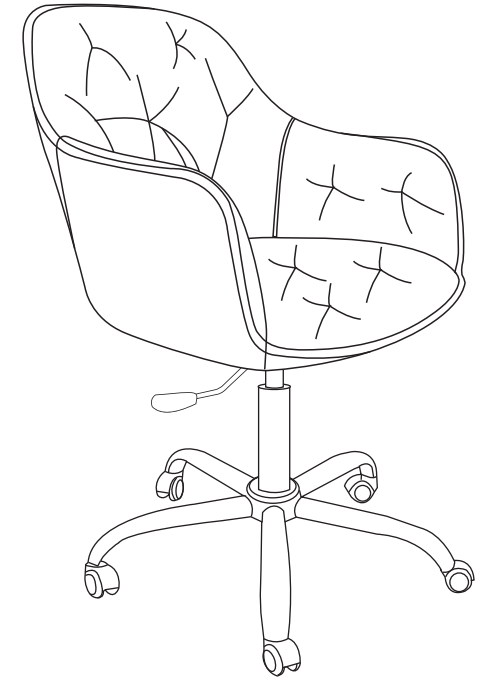

A		1	B	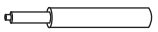	1	C	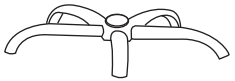	1	D		1	E		5			
F		1	G		4	H			1								