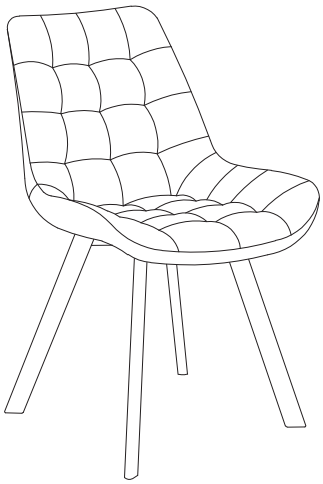

①x1	②x1	③x1
		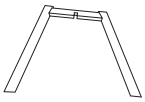

A X4	B X 8	C X 1	D X 4	E X 1	F X 1	G X 4
 M6X50		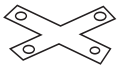	 M6X40	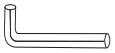 M5		

1

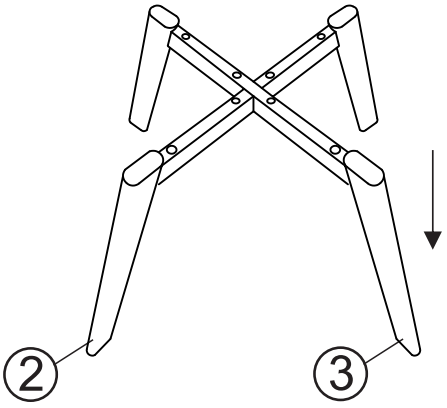

2

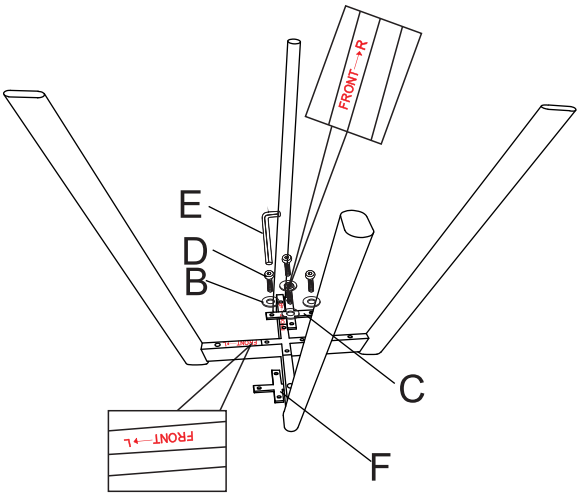

3

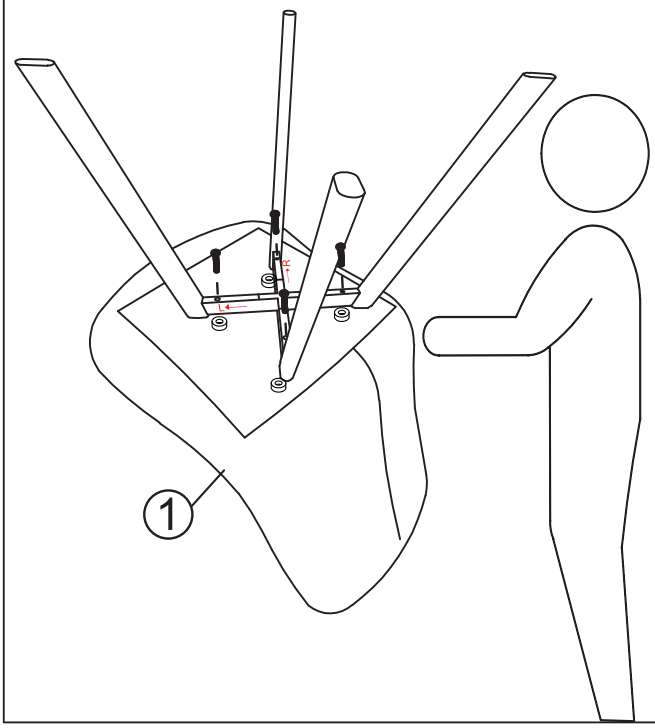

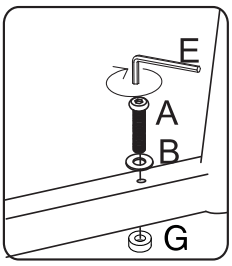

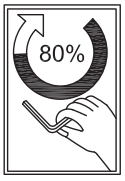

4 Put the chair onto flat place , fully tight all the screws after well adjusted flatness of the chair.



